Technical Specification Sheet

Gamma Ray CCL Tool - 2 3/4 in.

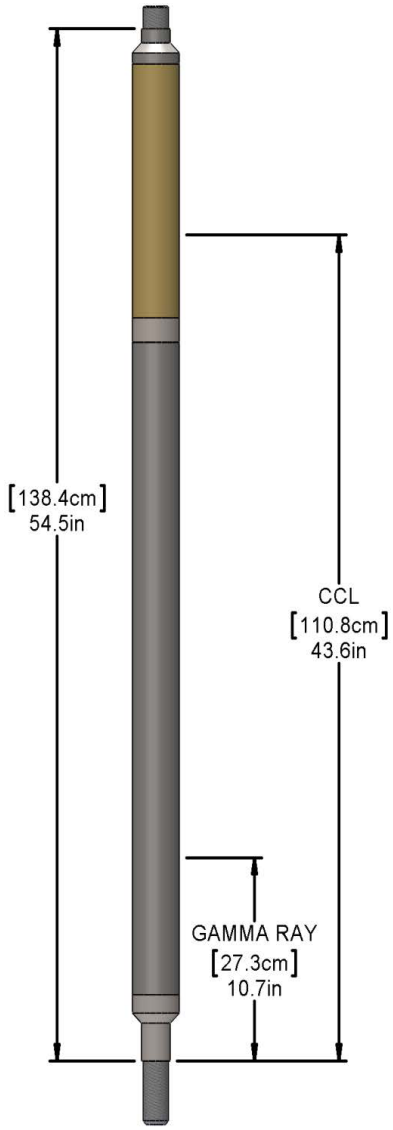

Ratings & Dimensions

Max Temperature	350°F (177°C) for 4 hours
Maximum Pressure	20,000 psi (138 MPa)
Outer Diameter	2.75 in (69.9 mm)
Length	54.48 in (1383.79 mm)
Weight	55.0 lb (25.0 kg)
Min Csg/Tbg OD	4.5 in (115.0 mm)
Max Csg/Tbg OD	7.0 in (178.0 mm)
Tensile Strength[1]	**Tension:** 65,000 lb **Compression:** 130,000 lb **Torque:**150 ft-lb
Measure Points	**Gamma Ray:** 10.68 in (271.27 mm) **Casing Collar Locator:** 43.56 in (1106.42 mm)

Borehole Conditions

Logging Speed	**Recommended:** 60 ft/min (18.2 m/min) **Maximum:** 100 ft/min (30.5 m/min) at 0.08 ft (.02 m) sample rate
Tool Positioning	Centralized | Eccentralized

Hardware Characteristics

	Gamma Ray	Casing Collar Locator
Sensor Type	Thallium Activated Sodium Iodide Crystal	Dual Magnet, Center Coil
Transmission Type	Analog Pulse or Telemetry	Line Wobble or Telemetry
Data Rate	20 frames / sec @ 20 kHz	
Combinability	Corrosion Platform	
Connections	GO Top / GO Pin Bottom	

Measurements

Principle	Natural Gamma Radiation	Magnetic Flux Lines
Range	0-10,000 cps	4.5 in to 7.0 in (115.0 mm to 178.0 mm)
Resolution	6.0 in (152.5 mm)	NA
Accuracy (1SD)	± 5%	NA
Sensitivity	≈ 1.5 cps per API Unit	NA
Primary Curves	GR (API)	CCL (mV)
Secondary Curves	Head Voltage, Internal Temperature (Telemetry Only)	

Calibration

Primary	Houston API Pits
Wellsite Verifier	Thorium Blanket

[1]Strengths apply to new tools at 70°F (21°C) and 0 psi.

© Copyright 1994-2020 Probe Technologies Holdings, Incorporated. All Rights Reserved. | Specifications may change without notice. | 050-GR275-0000