Technical Specification Sheet

Bowspring Centralizer - 3 Arm - 3 1/2 in.

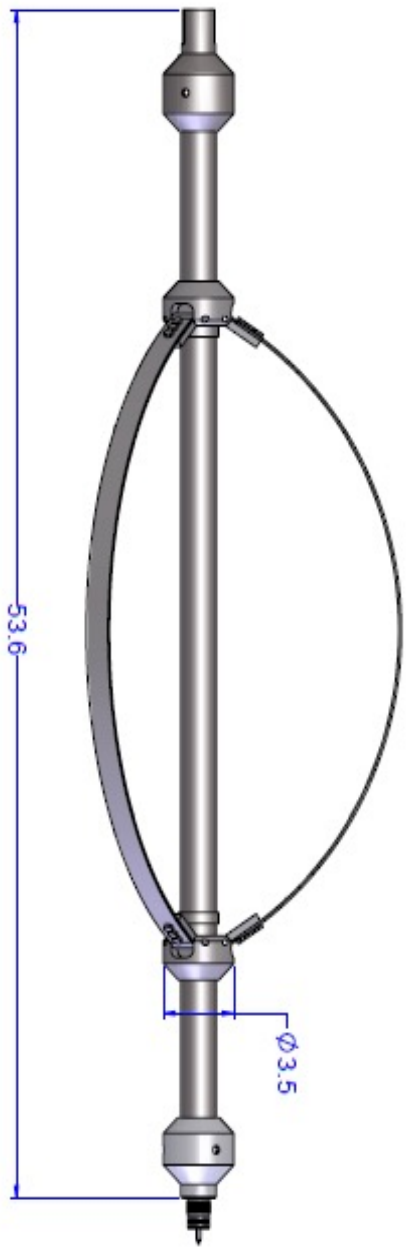

Ratings & Dimensions

Max Temperature[1]	400°F (205°C)
Max Pressure	20,000 psi (137.9 mPa)
Diameter	3.5 in (88.9 mm)
Length	53.52 in (1359.4 mm)
Weight	46.0 lb (41.0 kg)
Tensile Strength[2]	**Tension:** 30,500 lb **Compression:** 30,500 lb
Min Hole Size	5.5 in (139.7 mm)
Max Hole Size	18.0 in (457.2 mm)

Hardware Characteristics

Combinability	3.5 in X-Y Caliper
Tool Positioning	Centralized
Borehole Fluids	Salt, Fresh and Oil

Connections

Top	1 3/16" 12P GO box
Bottom	1 3/16" 12P GO pin

[1]Max Temp rating may be increased to 475°f (246°c) - limit of 4 hours when combined with HT logging tools.

[2]Strengths apply to new tools at 70°F (21°C) and 0 psi.

© Copyright 1994-2021 Probe Technologies Holdings, Incorporated. All Rights Reserved. | Specifications may change without notice. | 050-FG010-BH01