Technical Specification Sheet

Gamma Gun - Geiger Muller - Single - Shoot Neg - 2 3/4 in.

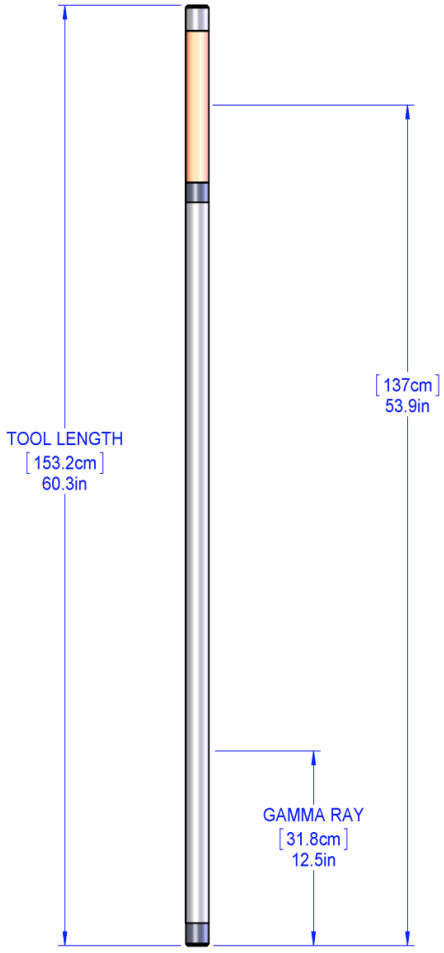

The single fire Gamma Gun is a ruggedized tool fitted with a Geiger-Muller detector on the lower section of the tool and a passive CCL at the top.

The tool is designed to be run with a Shooting Adapter at the bottom to suit the client's choice of gun system.

Ratings & Dimensions

Max Temperature	350°F (177°C) for 4 hours
Maximum Pressure	20,000 psi (138 MPa)
Outer Diameter	2.75 in (69.85 mm)
Length	73.2 in (1859.28 mm)
Weight	50.0 lb (23.0 kg)
Min Csg/Tbg OD	4.5 in (114.3 mm)
Max Csg/Tbg OD	7.0 in (178.0 mm)
Sensor Depth Offset	**Gamma Ray:** 20.8 in (528.32 mm) **Casing Collar Locator:** 62.7 in (1592.58 mm)

Borehole Conditions

Borehole Fluids	No Restrictions
Tool Positioning	Centralized | Eccentralized

Measurements

	Gamma Ray	**Casing Collar Locator**
Sensor Type	Geiger-Muller detector	Dual Magnet, Center Coil
Detection Type	Gamma Radiation	Magnetic
Principle	Naturally Occurring Gamma	Magnetic Flux Variation
Range	0 to 5,000 cps	
Data Transmission	Analog, Pulse, + Polarity	Analog, Line Wobble, mV
Sampling Rate	4 to 10 samples/ft. (10 to 40 samples/meter)	
Logging Speed	**Maximum:** About 30 ft (9 m) /min to 45 ft (9 to14 m) /min	
Sensitivity	Approx. 1.6 cps /GAPI unit	NA

Electrical Specifications (while logging)

Operating Voltage	60V DC internally regulated
Operating Current	60 mA
Shooting Power	300V DC maximum, using only rollup method, do not dump-fire

Calibration

Well-site Verifier	Thorium sleeve

© Copyright 1994-2021 Probe Technologies Holdings, Incorporated. All Rights Reserved. | Specifications may change without notice. | 050-GG275-0000