Technical Specification Sheet

Bowspring Centralizer - 4 Arm - Roller - 2 3/4 in.

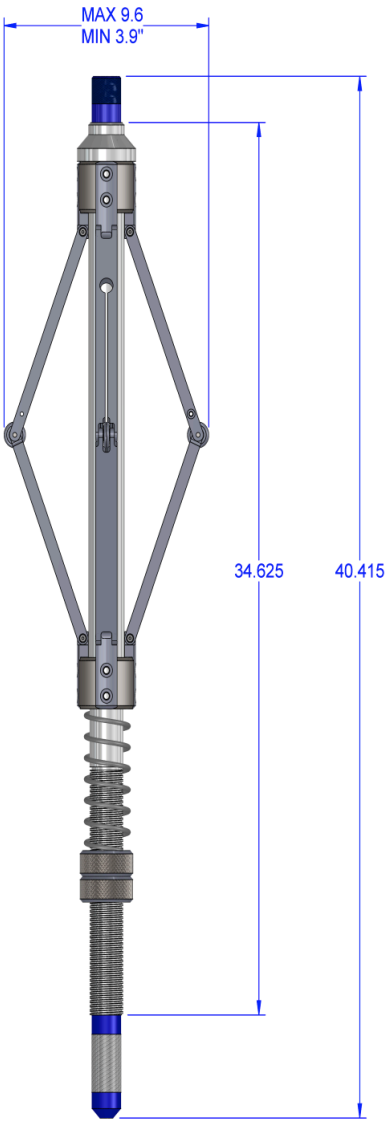

Ratings & Dimensions

Max Temperature[1]	400°F (205°C)
Max Pressure	20,000 psi (137.9 mPa)
Diameter	2.75 in (69.85 mm)
Length	34.56 in (877.824 mm)
Weight	38.0 lb (17.2 kg)
Tensile Strength[2]	**Tension:** 12,500 lb **Compression:** 12,500 lb
Min Hole Size	4.0 in (101.6 mm)
Max Hole Size	9.625 in (244.475 mm)

Hardware Characteristics

Combinability	2.75 in GR, CCL, Bond Tools, Additional Telemetry Tools
Tool Positioning	Centralized
Borehole Fluids	Salt, Fresh and Oil
Adjustment	Via locking, threaded collars at lower end of tool

Connections

Top	1 3/16" 12P GO box
Bottom	1 3/16" 12P GO pin

[1]Max Temp rating may be increased to 475°f (246°c) - limit of 4 hours when combined with HT logging tools.

[2]Strengths apply to new tools at 70°F (21°C) and 0 psi.

© Copyright 1994-2021 Probe Technologies Holdings, Incorporated. All Rights Reserved. | Specifications may change without notice. | 050-BC275-ROLR