Technical Specification Sheet

Gamma Gun - Scintillation - Dual - Shoot Positive - 2 3/4 in.

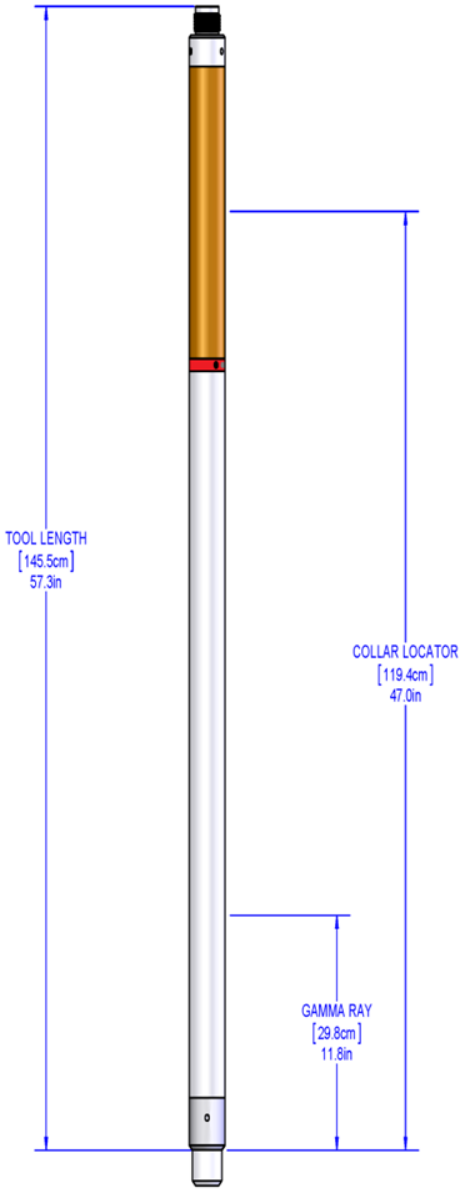

This Gamma Gun utilizes a ruggedized thallium doped sodium iodide [NaI (Tl) crystal] (3/4 in. x 4 in diameter) detector with a 1in. x 3 in. diameter photo multiplier tube (PMT), shock mounted inside the tool housing to provide maximum survivability in a perforating environment.

Ratings & Dimensions

Max Temperature	350°F (177°C) for 4 hours
Maximum Pressure	20,000 psi (138 MPa)
Outer Diameter	2.75 in (69.85 mm)
Length	57.3 in (1455.42 mm)
Weight	50.0 lb (23.0 kg)
Min Csg/Tbg OD	4.5 in (114.3 mm)
Max Csg/Tbg OD	7.0 in (178.0 mm)
Measurement Points	**Gamma Ray:** 11.8 in (299.72 mm) **Casing Collar Locator:** 47.0 in (1193.8 mm)
Tensile Strength	**Tension:** 60,000 lb **Compression:** 25,000 lb **Torque:** 150 lb ft (203 N-m)
External Markings	Tandem sub powder coated red to denote Shoot Positive

Borehole Conditions

Borehole Fluids	No Restrictions
Tool Positioning	Centralized | Eccentralized

Measurements

	Gamma Ray	Casing Collar Locator
Sensor Type	NaI(Ti) Scintillation Gamma	Dual Magnet, Center Coil
Principle	Naturally Occurring Gamma	Magnetic Flux Variation
Sensor Spacing	Proprietary	
Sensitivity	Approximately 1.6 counts/API unit	
Range	0 to 5,000 cps	
Vertical Resolution	14.00 in (355.6 mm)	
Precision	5% at 100 GAPI at 15 fpm (4.6 m/min)	
Data Transmission	Analog, Pulse, + Polarity	Analog, Line Wobble, mV
Logging Speed	**Maximum:** About 30 ft (9 m) /min to 45 ft (9 to14 m) /min	

Calibration

Primary	Approx. 1.6 cps/GAPI unit
Secondary	Thorium sleeve, API calibrated
Wellsite Verifier	Thorium sleeve, API calibrated

Electrical Specifications (while logging)

Operating (-ve) V	-65 VDC (+/-5V), internally regulated
Operating Current	60 mA DC (+/- 5mA)
Shooting (+ve) V	380 VDC maximum, rollup method recommended

© Copyright 1994-2021 Probe Technologies Holdings, Incorporated. All Rights Reserved. | Specifications may change without notice. | 050-GG275-10SP