Technical Specification Sheet

Vacuum Fill Station

The Probe Vacuum Fill Station assembly is used for oil filling RADii® and CBL tools.

Overall Dimensions

Length	34.0 in (863.6 mm)
Width	16.0 in (406.4 mm)
Height	41.0 in (1,041.4 mm)
Weight	210.0 lb (95.3 kg)

Assembly Contents

Cart	(1) Steel with rubberized caster wheels
Vacuum Pump	**(See Vacuum Pump Technical Specification Sheet)**
Aspirator Bottles	(1) 1000 mL and (1) 4000 mL
Male Hose Barb	(3) $^{1}/_{4}$ in x $^{1}/_{4}$ in, NPTF
Clamps	(2) Vibration damping $^{7}/_{8}$ in and (8) Min worm gear $^{7}/_{23}$ - $^{8}/_{8}$ in
Hose Barb Splicer	(3) $^{1}/_{4}$ in
Ball Valve	(3) $^{1}/_{4}$ in, full port import
Rubber Plugs	(1) #3 type $^{15}/_{16}$ in, (1) #6 type $^{13}/_{64}$ in, (1) #10-$^{1}/_{2}$ type 2 $^{3}/_{32}$ in
Gauge	(1) LM30 Vacuum
Brass Nipples	(3) $^{1}/_{4}$ in x 1 $^{1}/_{2}$ in and (2) $^{1}/_{4}$ in x 3 in
Brass Tee	(3) $^{1}/_{4}$ in
Brass Plug	(1) $^{1}/_{4}$ in square head
CVT Hoses	(15) $^{1}/_{4}$ in ID x $^{1}/_{2}$ in OD
Fixture Fill Tube	(1) 10-32
Vac. Pump Plate	(1) Aluminum 12 in x 24 in (3658.0 mm x 7315.0 mm)

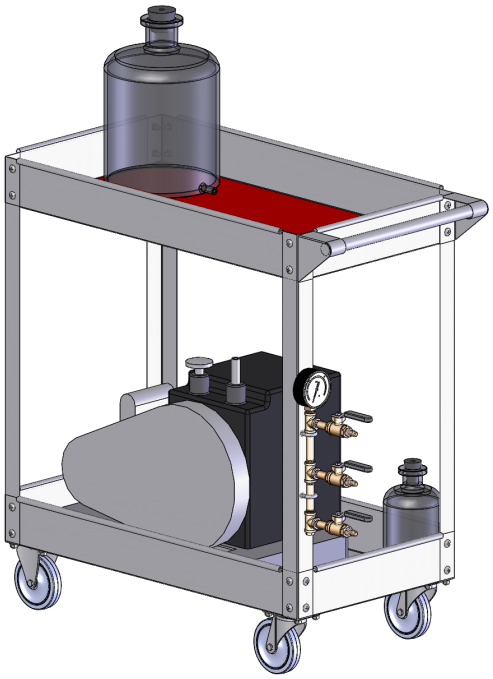

© Copyright 1994-2020 Probe Technologies Holdings, Incorporated. All Rights Reserved. | Specifications may change without notice. | 039-00220-0001