Technical Specification Sheet

Gamma Ray - CCL - Inclinometer Tool - 2 3/4 in.

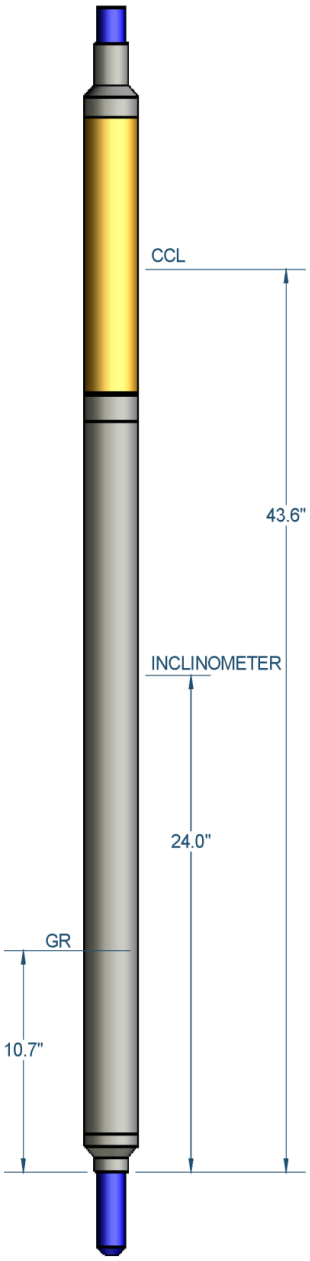

Ratings & Dimensions

Max Temperature	350°F (177°C) for 4 hours
Maximum Pressure	20,000 psi (138 MPa)
Outer Diameter	2.75 in (69.9 mm)
Length	54.48 in (1383.792 mm)
Weight	60.0 lb (27.3 kg)
Min Csg/Tbg OD	4.5 in (115.0 mm)
Max Csg/Tbg OD	7.0 in (178.0 mm)
Tensile Strength[1]	**Tension:** 65,000 lb **Compression:** 130,000 lb **Torque:**150 ft-lb
Measure Points	**GR:** 10.704 in (271.882 mm) **CCL:** 43.56 in (1106.424 mm) **INC:** 24.0 in (609.6 mm)

Borehole Conditions

Logging Speed	**Recommended:** 60 ft/min (18.2 m/min) **Maximum:** 100 ft/min (30.5 m/min) at 0.08 ft (.02 m) sample rate
Tool Positioning	Centralized | Eccentralized

Calibration

Primary	API Gamma Ray Pits, Approx. 1.6 cps per API Unit
Wellsite Verifier	Thorium Blanket

Electrical Specifications

Operating Voltage	100V DC

Hardware Characteristics

	Gamma Ray	**Casing Collar Locator**	**Inclinometer**
Sensor Type	Sodium Iodide, Thallium Activated Scintillation	Dual Magnet, Center Coil	3-Axis Accelerometer
Transmission Type	Digital Telemetry	Digital Telemetry	Digital Telemetry
Data Rate	20 frames / sec @ 20 kHz		
Combinability	Radii CBT, CBT, Single or Dual Spaced Neutron, Temperature		

Measurements

Principle	Natural Gamma Radiation	Magnetic Flux Lines	Gravity Vector
Range	0-10,000 cps	2.38 in to 7.0 in (60.452 mm to 178.0 mm)	± 2 g
Vert Resolution	6.0 in (152.5 mm)	NA	NA
Accuracy (1SD)	± 5%	NA	± 0.5 degrees
Sensitivity	~1.0 cps/API unit	NA	900 lsb/g
Primary Curves	GR (API)	CCL (mV)	Inclination
Secondary	Head Voltage, Internal Temperature, Accelorometer Outputs		

[1]Strengths apply to new tools at 70°F (21°C) and 0 psi.

© Copyright 1994-2021 Probe Technologies Holdings, Incorporated. All Rights Reserved. | Specifications may change without notice. | 050-GI275-0000