Technical Specification Sheet

Gamma Gun - Scintillation - Dual Fire - 1 $^{11}/_{16}$ in.

This Gamma Gun utilizes a ruggedized thallium doped sodium iodide [NaI (Tl) crystal] (3/4 in. x 4 in. diameter) detector with a 1 in. x 3 in. diameter photo multiplier tube (PMT), shock mounted inside the tool housing to provide maximum survivability in a perforating environment.

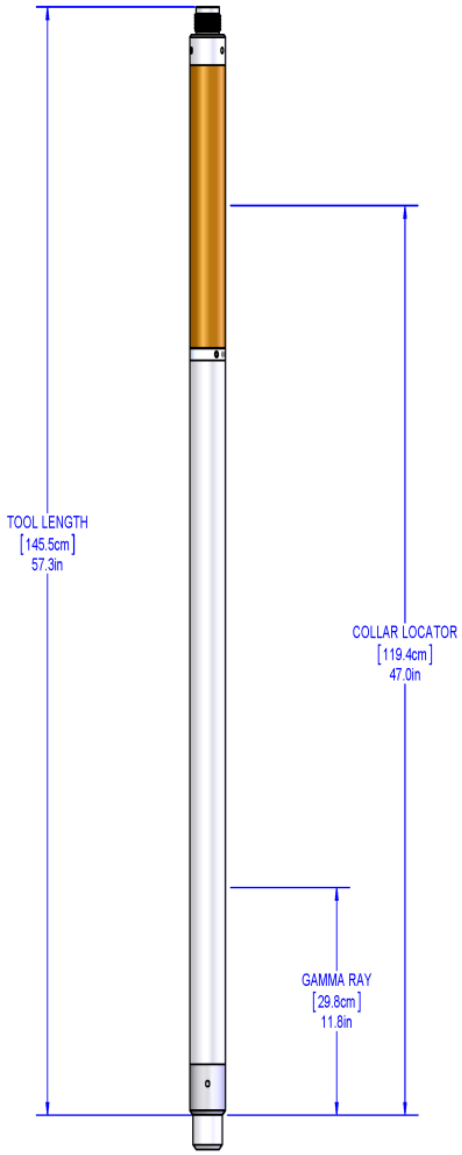

Ratings & Dimensions

Max Temperature	350°F (177°C) for 4 hours
Maximum Pressure	20,000 psi (138 MPa)
Outer Diameter	1.69 in (42.93 mm)
Length	60.3 in (1531.62 mm)
Weight	21.0 lb (9.5 kg)
Min Csg/Tbg OD	2.375 in (60.325 mm)
Max Csg/Tbg OD	7.0 in (178.0 mm)
Sensor Depth Offset	**Gamma Ray:** 9.0 in (228.6 mm) **Casing Collar Locator:** 47.0 in (1193.8 mm)
Tensile Strength	**Tension:** 60,000 lb **Compression:** 25,000 lb **Torque:** 150 lb ft (203 N-m)

Borehole Conditions

Borehole Fluids	No Restrictions
Tool Positioning	Centralized | Eccentralized

Measurements

	Gamma Ray	Casing Collar Locator
Sensor Type	NaI(Ti) Scintillation Gamma	Dual Magnet, Center Coil
Principle	Naturally Occurring Gamma	Magnetic Flux Variation
Sensor Spacing	Proprietary	
Sensitivity	Approximately 1.6 counts/API unit	
Range	0 to 5,000 cps	
Vertical Resolution	14.00 in (355.6 mm)	
Precision	5% at 100 GAPI at 15 fpm (4.6 m/min)	
Data Transmission	Analog, Pulse, + Polarity	Analog, Line Wobble, mV
Logging Speed	**Maximum:** About 30 ft (9 m) /min to 45 ft (9 to14 m) /min	

Calibration

Primary	Approx. 1.0 cps/GAPI unit
Secondary	Thorium sleeve, API calibrated
Wellsite Verifier	Thorium sleeve, API calibrated

Electrical Specifications

Cablehead Voltage	60 V DC Internally Regulated
Instrument Current	60 mA
Shooting Power	300 VDC maximum, using only rollup method, never dumpfire

© Copyright 1994-2021 Probe Technologies Holdings, Incorporated. All Rights Reserved. | Specifications may change without notice. | 050-GG170-10DF