Technical Specification Sheet

Gamma Gun - Geiger Muller - Single Fire - 1 $^{11}/_{16}$ in.

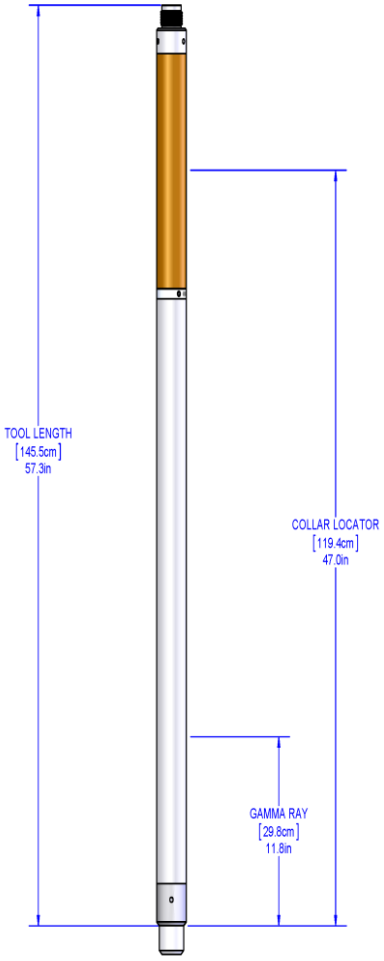

Ratings & Dimensions

Max Temperature	350°F (177°C) for 4 hours
Maximum Pressure	20,000 psi (138 MPa)
Outer Diameter	1.69 in (42.9 mm)
Length	60.3 in (1531.62 mm)
Weight	21.0 lb (9.5 kg)
Min Csg/Tbg OD	2.38 in (60.5 mm)
Max Csg/Tbg OD	7.0 in (178.0 mm)
Sensor Depth Offset	**Gamma Ray:** 12.5 in (317.5 mm) **Casing Collar Locator:** 53.9 in (1369.06 mm)

Borehole Conditions

Borehole Fluids	No Restrictions
Logging Speed	**Maximum:** About 30 ft (9 m) /min to 45 ft (9 to14 m) /min
Tool Positioning	Centralized | Eccentralized

Measurements

	Gamma Ray	**Casing Collar Locator**
Sensor Type	Geiger-Muller detector	Dual Magnet, Center Coil
Detection Type	Gamma Radiation	Magnetic
Principle	Naturally Occurring Gamma	Magnetic Flux Variation
Range	0 to 5,000 cps	
Data Transmission	Analog, Pulse, + Polarity	Analog, Line Wobble, mV
Calibration	Approx. 1.0 cps /GAPI unit	NA

Electrical Specifications

Cablehead Voltage	60 V Positive DC
Instrument Current	60 mA
Shooting Polarity	Negative

© Copyright 1994-2021 Probe Technologies Holdings, Incorporated. All Rights Reserved. | Specifications may change without notice. | 050-GG170-0000